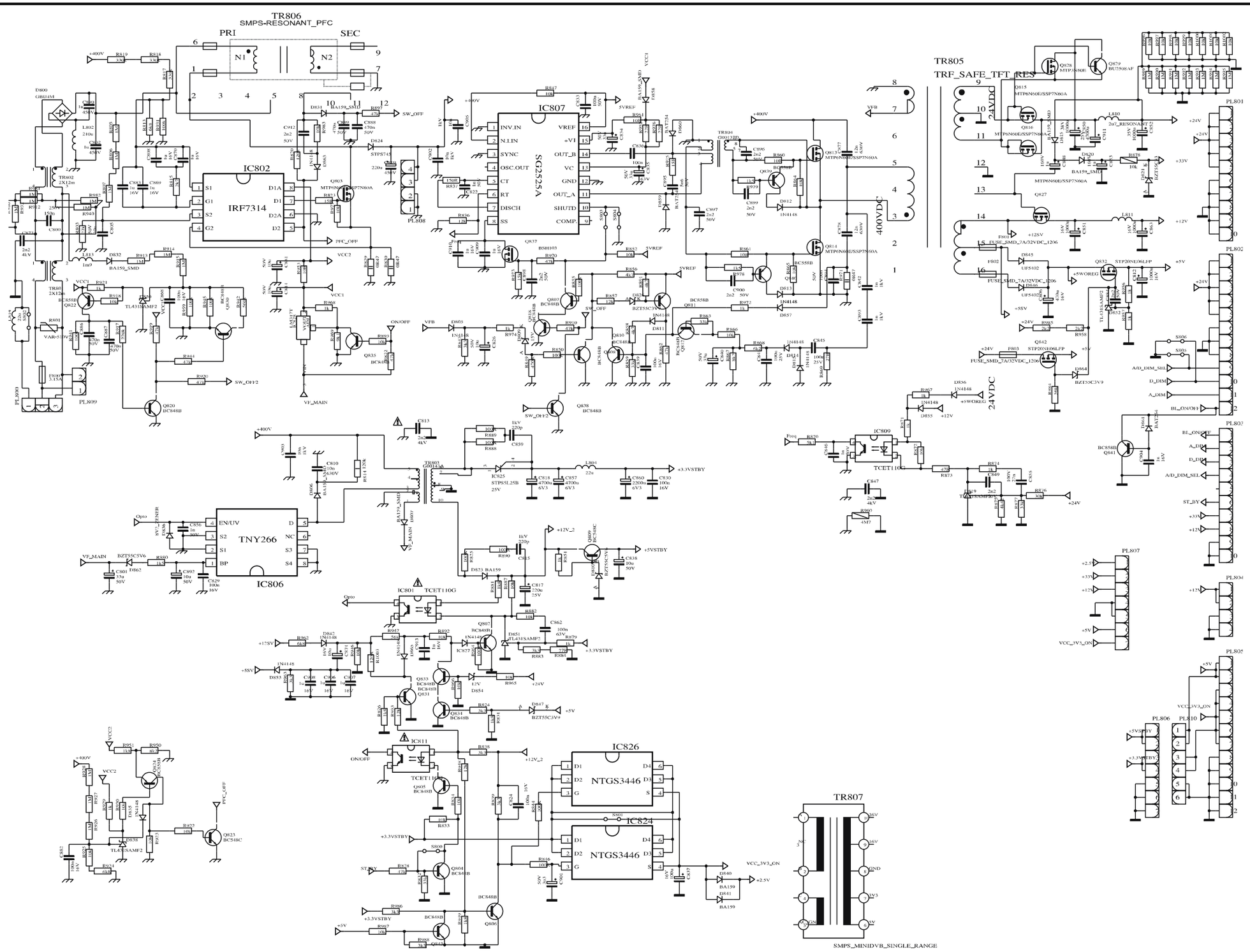

No. 0233	Resonant Mode TFT Power Supply	HITACHI